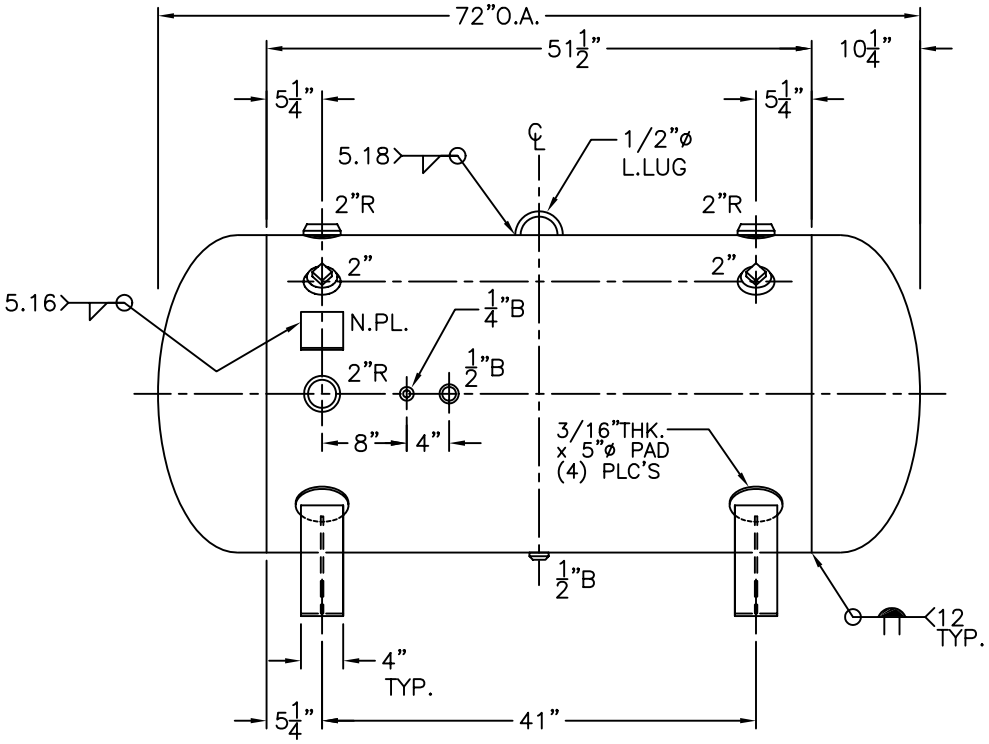

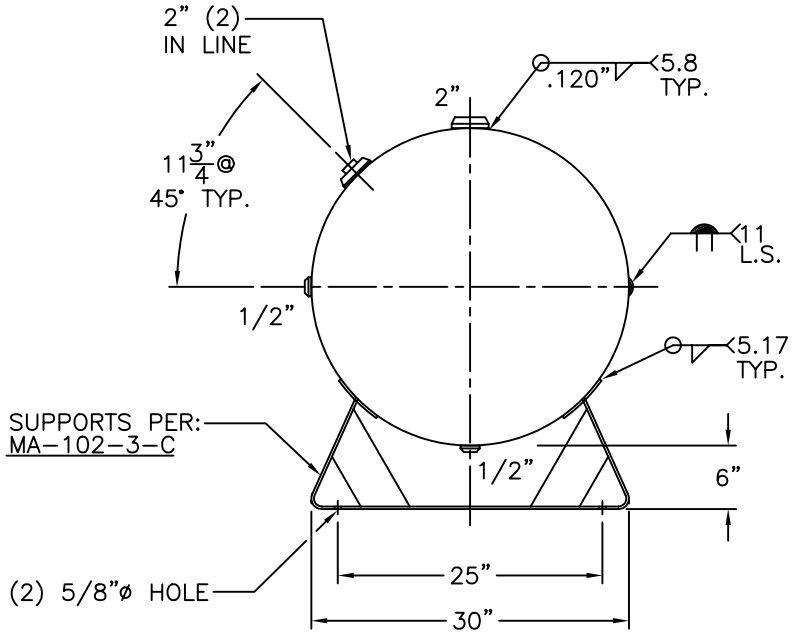

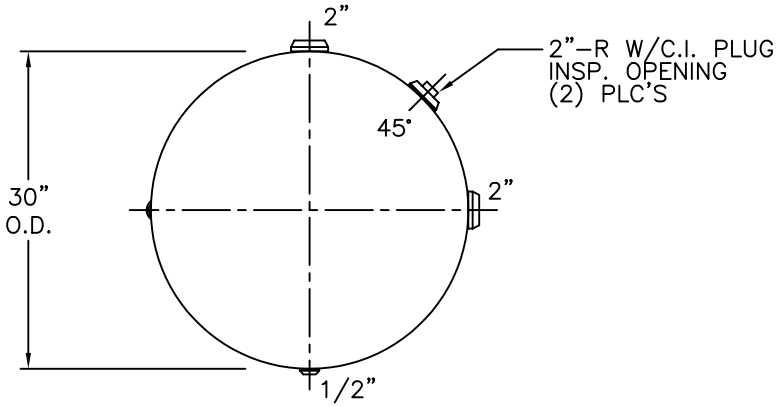

VIEW W/OUT SUPT'S

NOTE: 1) HYDRO @ 325 PSIG. MIN.

SHELL / HEADS	.179" SA-414-G 2:1 S.E.	30-HC-200-W
	JOGGLE	REV. 5-19-04
		DATE: 9-11-80
		FOR: HANSON STANDARD
		HORIZ. AIR TANK
	.207" SA-455	
	(.205"MIN.)	
		INSIDE: UNPAINTED
M.A.W.P. 250 PSIG. @ 400 °F		
M.D.M.T. -20 °F @ 250 PSIG.		OUTSIDE: PRIME
ASME SECTION VIII DIV. 1, 2001 ADD 2003		CAD-"B" SIZE UNDER "STD"-SERIES
X-RAY: RT-4 SPOT L.S. & HDS. G.S.		BY: J.G. SCALE: 1"=12"
GALLONS: 200	WT. 458 LBS.	ROY E. HANSON JR. MFG.
SERIAL NO.		1924 COMPTON AVE. LOS ANGELES, CA 90011