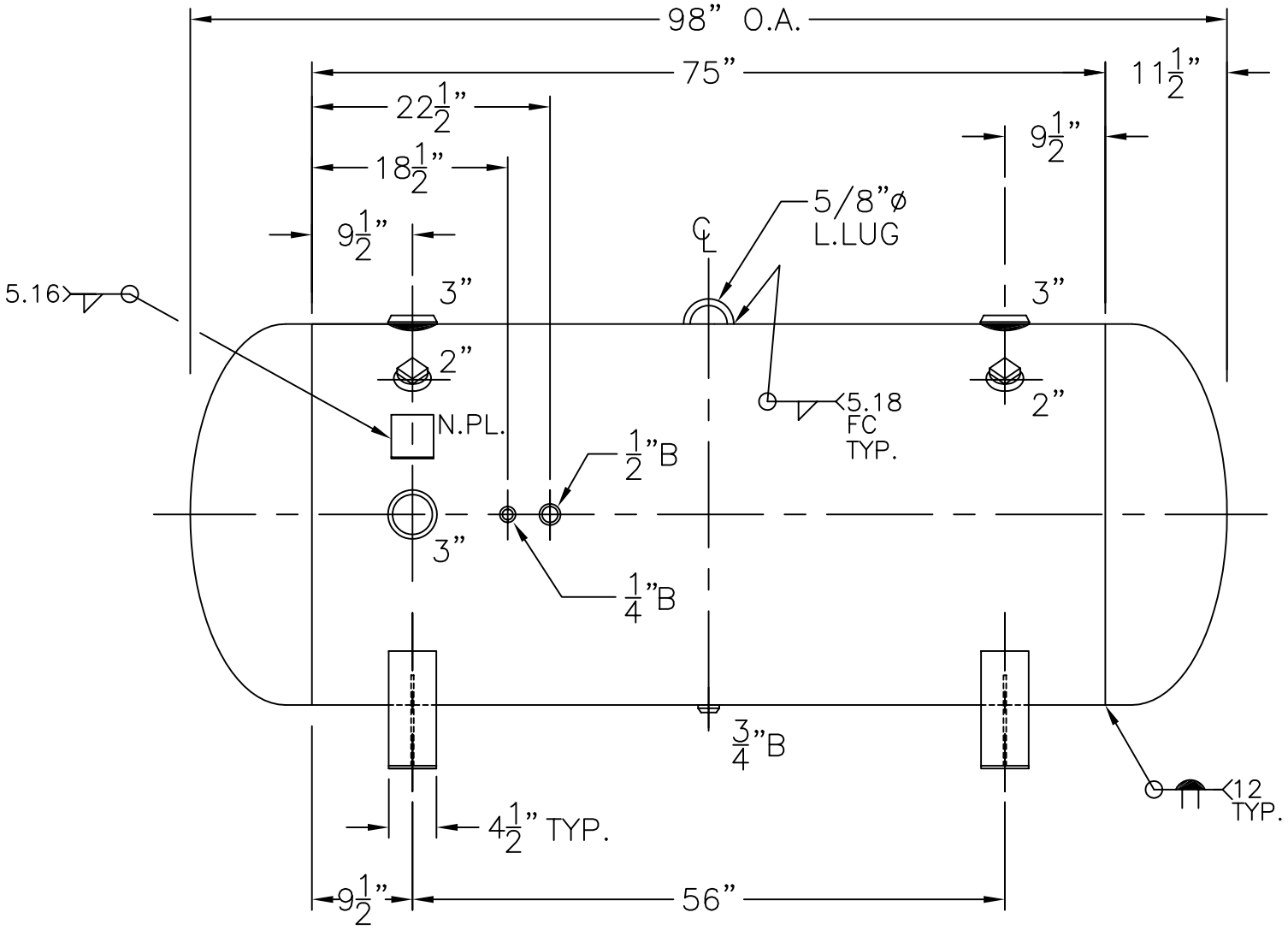

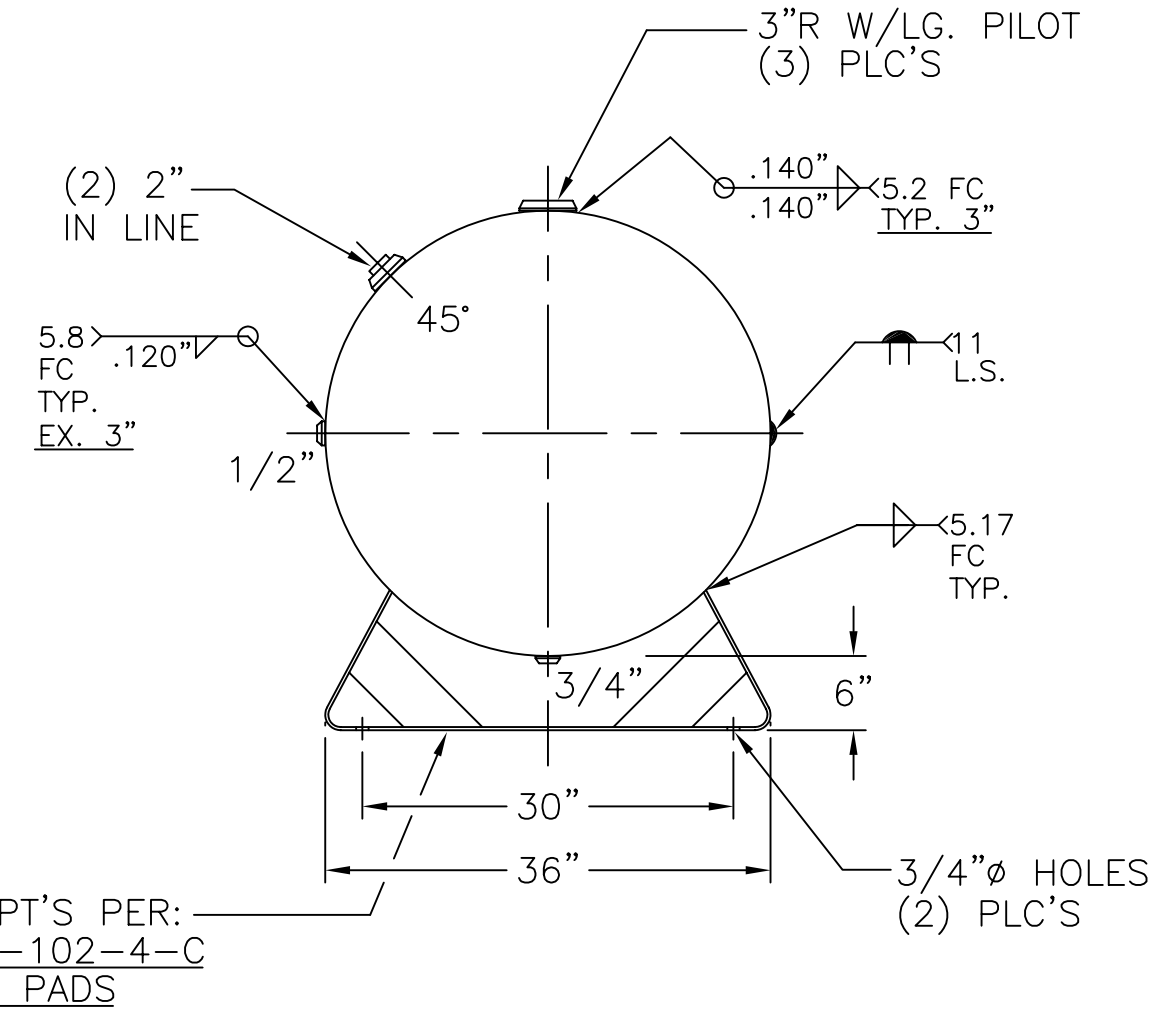

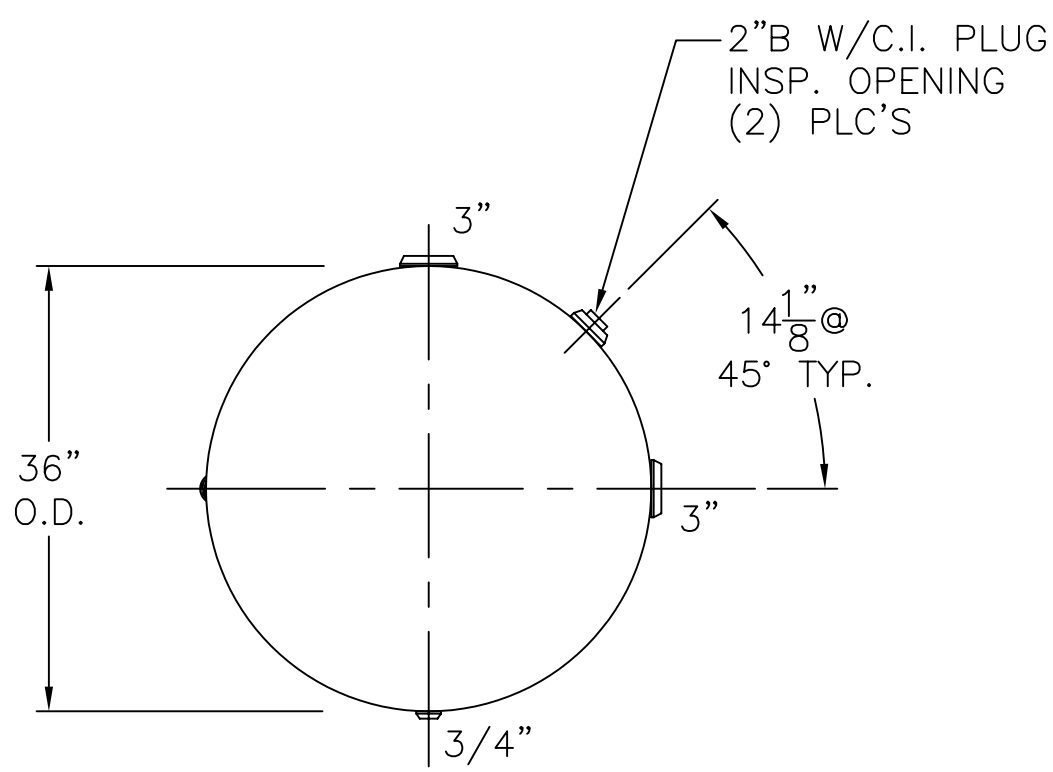

VIEW W/OUT SUPT'S

NOTE: 1) HYDRO @ 390 PSIG. MIN.

SHELL / HEADS	.3125" SA-455 2:1 S.E.	36-HD-400-W	REV. 11-11-09
	(.293"MIN.) TRIM		DATE: 4-1-87
		FOR: HANSON STANDARD	
		HORIZ. AIR TANK	
	.317" SA-455 (.295"MIN.)		
		INSIDE: UNPAINTED	
M.A.W.P. 300 PSIG. @ 400 °F			
M.D.M.T. -20 °F @ 300 PSIG.		OUTSIDE: PRIME	
ASME SECTION VIII DIV. 1, 2007 ADD 2008		CAD-"B" SIZE UNDER "STD"-SERIES	
X-RAY: RT-4 SPOT L.S. ONLY		BY: J.G.	SCALE: 3/4"=12"
GALLONS: 400	WT. 1131 LBS.	ROY E. HANSON JR. MFG.	
SERIAL NO.		1600 E. WASHINGTON BLVD. LOS ANGELES, CA 90021	